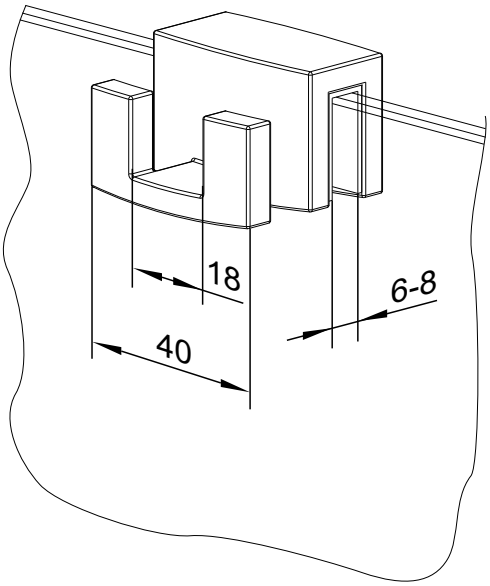
18
6-8
40